US-LT40B&40A SERIES SCREWDRIVERS

EXPLODED VIEW

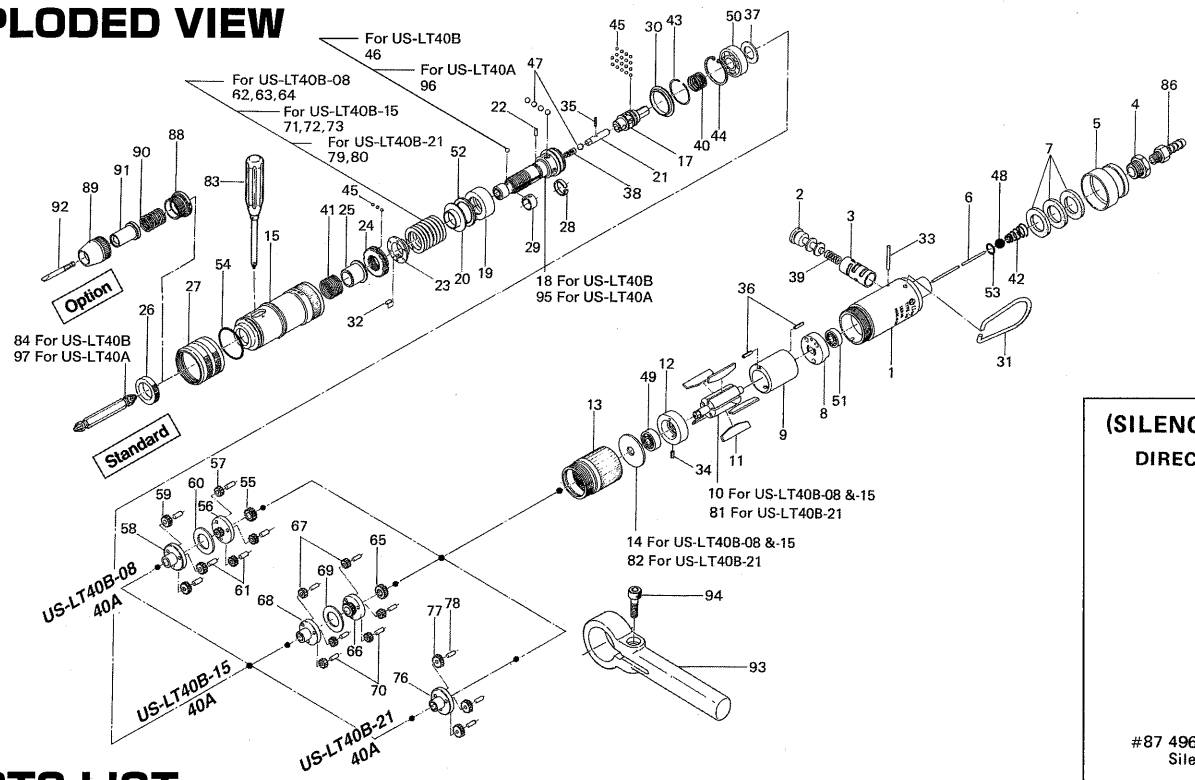

(SILENCER) Option

DIRECT Type

#87 496-088-1
Silencer Assembly

PARTS LIST

Index No.	Code No.	Parts Name	Quantity
US-LT40B & 40A series Common Parts			
# 1	472-025-7	Casing	1
# 2	893-057-1	Reverse Valve (Lock)	1
# 3	472-211-7	Reverse Valve Bushing	1
# 4	480-091-8	Air Inlet Bushing	1
# 5	472-782-7	Exhaust Deflector	1
# 6	472-104-7	Valve Rod	1
# 7	161-835-4	Filter(K50)	3
# 8	467-285-7	Rear Plate	1
# 9	472-286-7	Cylinder	1
#11	472-288-0	Blade (PC)	5
#12	472-289-7	Front Plate	1
#13	472-029-7	Gear Casing	1
#15	472-369-7	Clutch Casing	1
#17	472-346-5	Cam	1
#18	472-319-7	Anvil	1
#19	472-375-7	Cam Ring	1
#20	472-379-8	Retainer	1
#21	471-318-5	Pilot Pin	1
#22	471-764-7	Notch Pin	1
#23	472-562-8	Spring Holder	1
#24	472-257-8	Regulating Screw	1
#25	472-351-7	Bit Sleeve	1
#26	472-567-7	Bushing	1
#27	472-370-7	Clutch Casing Sleeve	1
#28	471-670-7	Band	1
#29	471-356-7	Bit Band	1
#30	463-334-7	Anvil Spacer	1
#31	010-790-1	Suspension Ring	1
#32	970-092-0	Pin (2×5.5)	1
#33	970-105-0	Pin (2×24)	1
#34	973-006-0	Roll Pin (2×6)	1
#35	969-470-0	Pin (2×8)	1
#36	973-010-0	Roll Pin (2×10)	2
#37	975-106-0	Spacer (18.5×11×1)	1
#38	976-058-0	Spring (4.5×11)	1
#39	976-147-0	Spring (7×12)	1
#40	976-332-0	Spring (13.5×10)	1
#41	976-450-0	Spring (18.5×10)	1
#42	977-157-0	Cone Spring (7×11×20)	1
#43	978-218-0	Snap Ring (22×1)	1
#44	979-326-0	Inner Snap Ring (IRTW-26)	1
#45	981-001-0	Ball (3/32)	21
#46	981-002-0	Ball (1/8)	1
#47	981-004-0	Ball (3/16)	5
#48	981-208-0	Ball (5/16) (Black)	1
#49	982-063-0	Ball Bearing (606ZZ)	1
#50	982-100-0	Ball Bearing (6000)	1
#51	987-039-0	Miniature Ball Bearing (R-1560 ZZ)	1
#52	944-019-0	Back-up Ring (P-19)	1
#53	990-005-0	O-Ring (P-7)	1
#54	990-923-0	O-Ring (SNS-26)	1
Parts for US-LT40A Series			
#95	472-319-6	Anvil	1
#96	981-003-0	Ball (5/32)	1
#97	916-710-0	(+)Double Bit (NO.2×70)(5H)	1
Parts for US-LT40B & 40A-08			
#55	472-460-7	Rotor Gear	1
#56	472-480-7	First Gear Cage	1
#57	472-470-7	First Planet Gear	3
#58	472-485-7	Second Gear Cage	1
#59	472-471-7	Second Planet Gear	3
#60	496-483-1	Gear Cage Spacer	1
#61	972-089-0	Roller (3×8)	6
#62	976-515-0	Spring (22.7×28) (Standard)	1
#63	976-516-0	Spring (22.1×28) (Red) (Option : Weaker)	1
#64	976-517-0	Spring (21.5×31) (Yellow) (Option : Weakest)	1
#10	472-287-7	Rotor	1
#14	472-807-7	Spacer	1
Parts for US-LT40B & 40A-15			
#65	472-460-5	Rotor Gear	1
#66	472-480-5	First Gear Cage	1
#67	472-470-5	Planet Gear	6
#68	472-485-5	Second Gear Cage	1
#69	496-483-1	Gear Cage Spacer	1
#70	972-089-0	Roller (3×8)	6
#71	976-516-0	Spring (22.1×28) (Standard)	1
#72	976-515-0	Spring (22.7×28) (Option : Strong)	1
#73	976-517-0	Spring (21.5×31) (Yellow) (Option : Weak)	1
#10	472-287-7	Rotor	1
#14	472-807-7	Spacer	1
Parts for US-LT40B & 40A-21			
#76	472-480-3	Gear Cage	1
#77	472-470-3	Planet Gear	3
#78	972-089-0	Roller (3×8)	3
#79	976-517-0	Spring (21.5×31) (Standard)	1
#80	976-516-0	Spring (22.1×28) (Red) (Option : Strong)	1
#81	472-287-3	Rotor	1
#82	472-807-3	Spacer	1
Accessories			
#83	939-402-0	Manual Driver (No.2)	1
#84	916-810-0	(+)Double Bit (No.2×75)	1
#86	940-113-0	Air Hose Nipple	1
Optional Accessories			
#93	472-516-7	Reaction Bar	1
#94	945-222-0	Hexagon Bolt (M6×22)	1
For Direct Type			
#87	496-088-1	Silencer Assembly	1
For Slotted Head Bit and Finder (Take out 472-567-7 Bushing, firstly.)			
#88	472-082-7	Bit Casing Set Screw	1
#89	471-057-7	Bit Casing	1
#90	976-330-0	Spring (13.8×18)	1
#91	917-350-0	Finder (7.3×56×24)	1
#92	916-030-0	(-)Bit (5×56)	1

When ordering spare parts, please specify tool type, code number and part name.

Printed in Japan

RECYCLED PAPER
PRINTED WITH SOY INK

URYU SEISAKU, LTD. Osaka Japan

For further information, please contact at any time your nearest URYU distributor.

Jan 2012

OKA-249-11-11-02-3011