UX-800S & 800C OIL-PULSE WRENCHES

EXPLODED VIEW

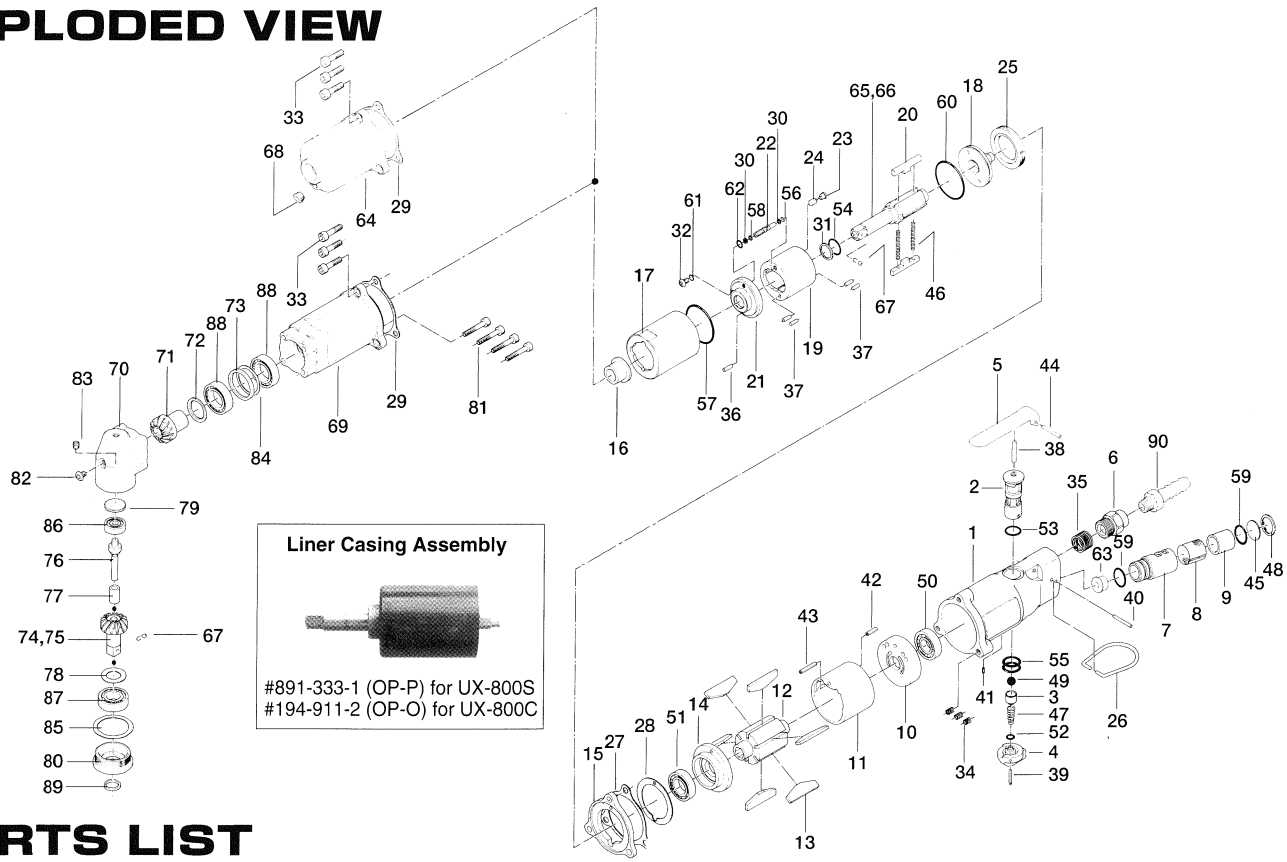

PARTS LIST

Index. No.	Code No.	Parts Name	Quantity
# 1	180-025-6	Handle	1
# 2	180-210-6	Reverse Valve	1
# 3	186-100-1	Valve	1
# 4	020-212-1	Reverse Lever	1
# 5	500-107-1	Valve Lever	1
# 6	180-091-6	Air Inlet Bushing	1
# 7	194-780-4	Exhaust Stack	1
# 8	194-042-4	Silencer	1
# 9	611-780-7	Filter	1
# 10	180-285-6	Rear Plate	1
# 11	180-286-6	Cylinder	1
# 12	194-287-2	Rotor	1
# 13	167-288-6	Blade (PC)	6
# 14	180-289-6	Front Plate	1
# 15	180-027-6	Separator	1
# 16	185-328-2	Anvil Bushing	1
# 17	194-905-2	Liner Casing	1
# 18	194-901-2	Rear Liner Plate	1
# 19	194-902-2	Liner	1
# 20	194-440-2	Driving Blate	2
# 21	194-904-2	Front Liner Plate	1
# 22	194-907-2	Relife Valve Spindle	1
# 23	194-969-2	Relife Valve Plug	1
# 24	194-970-2	Relife Valve	1
# 25	194-906-2	Liner Casing Cover	1
# 26	010-790-1	Suspension Ring	1
# 27	180-854-6	Handle Packing	1
# 28	193-856-1	Separator Packing	1
# 29	180-867-6	Front Casing Packing	1
# 30	944-002-0	Supporter Ring (2.6×4.5×1)	2
# 31	944-214-0	Supporter Ring (12×15.9×1.5)	1
# 32	945-942-0	Hexagon Round Head Bolt (M4×6)	1
# 33	945-120-0	Allen Head Bolt (M5×20)	3
# 34	965-011-0	Heli-Sert (M5×1.5D)	3
# 35	965-073-0	Heli-Sert (UNF 5/8×N6)	1
# 36	969-450-0	Pin (G) (3×8)	1
# 37	970-206-0	Pin (H) (3×8)	4
# 38	970-327-0	Pin (H) (4×26)	1
# 39	973-022-0	Roll Pin (2×22)	1
# 40	971-163-0	Roll Pin (2.5×23)	1
# 41	973-005-0	Roll Pin (2×5)	1
# 42	973-112-0	Roll Pin (3×12)	1
# 43	973-118-0	Roll Pin (3×18)	1
# 44	973-124-0	Roll Pin (3×24)	1
# 45	975-598-0	Round Plate (18×1)	1
# 46	976-793-0	Spring (3.7×29) WPC	2
# 47	977-103-0	Cone Spring (6×9.5×16)	1
# 48	979-318-0	Inner Snap Ring (IRTW-18)	1
# 49	981-208-0	Ball (5/16)	1
# 50	982-403-0	Ball Bearing (EE-4)	1
# 51	982-903-0	Ball Bearing (6902)	1
# 52	990-322-0	O-Ring (ARP-568-107)	1
# 53	990-009-0	O-Ring (P10A)	1
# 54	990-152-0	O-Ring (P12)	1
# 55	990-015-0	O-Ring (P15)	2
# 56	990-320-0	O-Ring (ARP-568-003)	1
# 57	990-337-0	O-Ring (JW1530-27)	1
# 58	990-900-0	O-Ring (SNS-2)	1
# 59	990-914-0	O-Ring (SNS-16)	2
# 60	990-924-0	O-Ring (SNS-30)	1
# 61	990-971-0	O-Ring (SNS-3)	1
# 62	990-973-0	O-Ring (SNS-5)	1

PARTS FOR UX- 800S

# 63	194-781-2	Exhaust Stack Bushing	1
# 64	180-439-6	Front Casing	1
# 65	891-310-1	Anvil (OP-P)	1
# 66	194-319-2	Anvil (O)	1
# 67	891-300-1	Socket Retainer Pin Assy	1
# 68	966-100-0	Allen Head Plug (PT 1/8)	1

PARTS FOR UX- 800C

# 66	194-319-2	Anvil (O)	1

Index. No.	Code No.	Parts Name	Quantity
# 67	891-300-1	Socket Retainer Pin Assy	1
# 69	179-439-8	Front Casing	1
# 70	179-441-7	Angle Head Casing	1
# 71	179-420-6	Driving Gear	1
# 72	179-425-6	Driving Gear Spacer	1
# 73	179-423-6	Driven Gear Bushing	1
		Spacer	1
# 74	891-346-1	Driven Gear (P)	1
# 75	020-430-1	Driven Gear (O)	1
# 76	188-431-1	Driven Gear Spindle	1
# 77	020-432-1	Driven Gear Spindle Cover	1
# 78	020-433-1	Driven Gear Spacer	1
# 79	562-391-7	Spindle Rear Cover	1
# 80	179-488-6	Angle Head Casing Cover	1
# 81	945-127-0	Allen Head Bolt (M5×25)	4
# 82	945-949-0	Hexagon Round Head Bolt (M5×6)	1
# 83	954-206-0	Allen Head Cone Point Screw (M5×6)	1
# 84	975-803-0	Adjusting Spacer (30×26×T)	1
# 85	975-836-0	Adjusting Spacer (36×32.5×T)	1
# 86	982-021-0	Ball Bearing (626)	1
# 87	982-101-0	Ball Bearing (6001)	1
# 88	982-904-0	Ball Bearing (6903)	2
# 89	993-003-0	Felt Ring (12×16×2)	1

ACCESSORIES

# 90	940-114-0	Air Hose Nipple (NPT 1/4×3/8)	1
	900-075-0	Hexagon Socket (3/8SQ 17×25)	1
	939-104-0	Allen Wrench (5MM)	1
	939-109-0	Allen Wrench (2MM) (64×64)	1

When ordering spare parts, please specify tool type, code number and parts name.

Printed in Japan

URYU SEISAKU,LTD. Osaka, Japan

OKA-345-02-10-20-2004