UL130MC OIL-PULSE WRENCH

EXPLODED VIEW

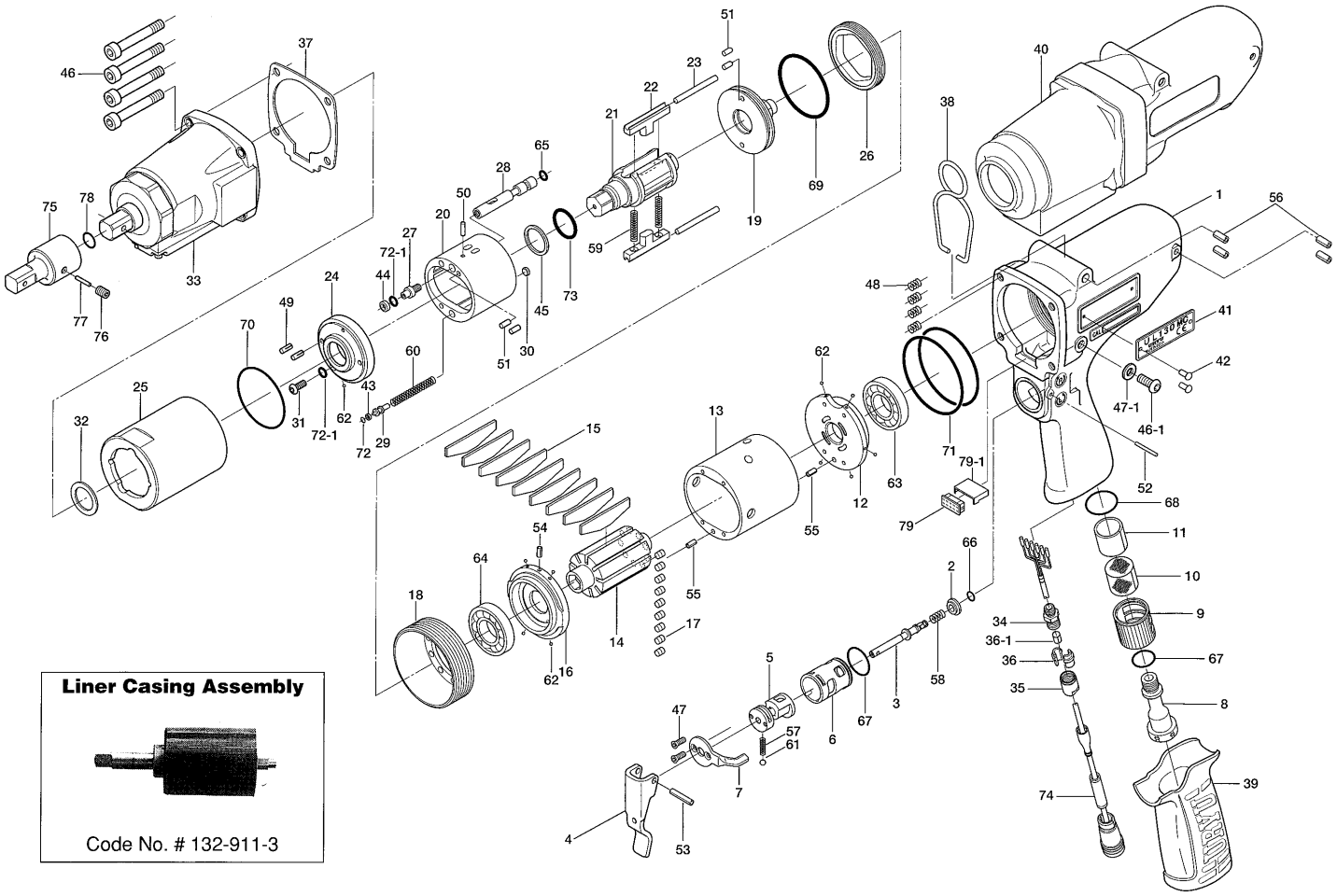

PARTS LIST

Index No.	Code No.	Parts Name	Quantity
# 1	123-025-6	Handle	1
# 2	130-100-2	Valve	1
# 3	130-104-2	Valve Rod	1
# 4	130-107-2	Valve Lever	1
# 5	130-210-2	Reverse Valve	1
# 6	130-211-2	Reverse Valve Bushing	1
# 7	130-212-2	Reverse Lever	1
# 8	130-091-2	Air Inlet Bushing	1
# 9	130-780-2	Exhaust Stack	1
#10	130-042-2	Silencer	1
#11	130-835-3	Filter (K50)	1
#12	130-285-2	Rear Plate	1
#13	123-286-6	Cylinder	1
#14	123-287-6	Rotor	1
#15	123-288-6	Blade (PC)	9
#16	123-289-6	Front Plate	1
#17	148-064-2	Plug	9
#18	123-036-6	Hammer Casing Connector	1
#19	123-901-6	Rear Liner Plate	1
#20	130-902-2	Liner	1
#21	123-319-7	Anvil	1
#22	130-440-2	Driving Blade	2
#23	130-974-2	Roller Pin (3x40)	2
#24	130-904-2	Front Liner Plate	1
#25	130-905-2	Liner Casing	1
#26	130-906-2	Liner Casing Cover	1
#27	175-907-9	Relief Valve Spindle	1
#28	130-970-2	Relief Valve	1
#29	130-972-2	Accumulator	1
#30	148-908-2	Accumulator Cover	1
#31	945-942-0	Hexagon Head Bolt (M4×6)	1
#32	147-327-8	Anvil Front Spacer	1

Index No.	Code No.	Parts Name	Quantity
#33	851-693-1	Sensor Casing Assembly (S15S)	1
#34	851-301-1	Connector	1
#35	851-302-1	Cap	1
#36	851-303-1	Stopper	2
#36-1	131-395-8	Outer Ring	1
#37	132-867-3	Front Casing Packing	1
#38	174-790-0	Suspension Ring	1
#39	130-842-2	Handle Cover	1
#40	132-840-3	Body Jacket	1
#41	132-924-3	Name Plate	1
#42	930-205-0	Driver Screw Rivet No. 0×26	2
#43	944-003-0	Supporting Ring (3×5×1)	1
#44	944- 2 05-0	Supporting Ring (5.1×7×1)	1
#45	944-215-0	Supporting Ring (16×19.9×1.5)	1
#46	945-420-0	Allen Head Bolt (M6×20)	4
#46-1	945-949-0	Hexagon Head Bolt (M5×6)	1
#47	948-423-0	Allen Flush Head Screw (M3×6)	2
#47-1	961-012-0	Flat Washer (5mm)	1
#48	965-021-0	Heli-Sert (M6×1.5D)	4
#49	969-450-0	Pin (G) (3×8)	2
#50	970-092-0	Pin (H) (2×5.5)	1
#51	970-206-0	Pin (H) (3×8)	4
#52	971-126-0	Pin (2×26)	1
#53	973-120-0	Roll Pin (3×20)	1
#54	973-006-0	Roll Pin (2×6)	1
#55	973-108-0	Roll Pin (3×8)	2
#56	973-308-0	Roll Pin (5×8)	4
#57	976-006-0	Spring (3×5)(0.4)	1
#58	976-643-0	Spring (7.5×9.7)(0.9)	1
#59	976-807-0	Spring (4.5×38)(0.6)WPC	2
#60	976-721-0	Spring (4.8×34.5)(0.7)	1
#61	981-002-0	Ball (1/8)	1

Index No.	Code No.	Parts Name	Quantity
#62	981-045-0	Ball (1.5)	10
#63	982-950-0	Ball Bearing (16002)	1
#64	982-905-0	Ball Bearing (6904)	1
#65	990-972-0	O-Ring (SNS-4)(NOK)	1
#66	990-306-0	O-Ring (ARP568-004)(H)	1
#67	990-916-0	O-Ring (SNS-18)	2
#68	990-921-0	O-Ring (SNS-22.4)	1
#69	990-930-0	O-Ring (SNS-40)	1
#70	990-932-0	O-Ring (SNS-42)	1
#71	990-611-0	O-Ring (51.5×2)	2
#72	990-970-0	O-Ring (SNS-2)(NOK)	1
#72-1	990-971-0	O-Ring (SNS-3)(NOK)	2
#73	992-021-0	O-Ring (Q16)(NTN)	1
#74	910-258-0	Joint Cable Assembly	1
#79	909-918-0	Double-Row Socket	1
#79-1	911-012-0	Connector Cover	1

ACCESSORIES

#75	904-190-0	Extension Bar (1/2×60)(MC)	1
#76	953-205-0	Allen Head Screw (M5×5)	1
#77	971-220-0	Pin (3×20)	1
#78	990-016-0	O-Ring (P16)	1
#80	909-749-0	Solenoid Valve Assembly	1
#81	939-109-0	Allen Wrench (2)	1
#82	909-105-0	Allen Wrench (4)	1
#83	940-114-0	Air Hose Nipple (NPT1/4×3/8)	1

OPTIONAL ACCESSORIES

#84	910-263-0	Sensor Cable Assembly (3F5)	1
#85	910-633-0	Connector Cover	1

When ordering spare parts, please specify tool type, code number and parts name.

Printed in Japan

RECYCLED PAPER
PRINTED WITH SOY INK

URYU SEISAKU, LTD. Osaka,Japan

For further information, please contact at any time your nearest URYU distributor.

2011

OKA-525-11-04-22-302